WLI with emergency light

Wall and ceiling-mounted luminaire

WLI-31NW-NT
WLI-31WW-NT

ALS ARCHITEKTONISCHE LICHT SYSTEME

White

IP44 CE

DESCRIPTION OF PARTS

Wall and ceiling-mounted luminaire LED 31W
Aluminium sheet base plate coated white
Dimension: Ø360 x H85 mm
Opal PMMA cover
with emergency light Tridonic 3 hours incl. Battery

TECHNICAL DATA

220-240V 50/60 Hz 31W
Emergency power: 220-240V 50/60 Hz 350mA
Two separate LED modules for emergency light 6500K
Battery: NIMH C 5A

WLI-31NW-NT = 4000K
WLI-31WW-NT = 3000K
non-dimmable
protection class I

LAMP

LED
The LED light agent cannot be replaced.

ERSATZTEILE

Battery
Article number: NOT-AKKU2AH-5A

Protection class I

Notification of Risks

CE label

Safety Instructions

IP44 The light is only suitable for use indoors or in roofed outdoor areas.

Cleaning Instructions

The product may not be disposed of in the household garbage.

Installation only by qualified and authorised persons.

IK08 Resistance of electr. Housings against mechanical stress

SAFETY

READ THE INSTRUCTIONS BEFORE USING THIS PRODUCT. KEEP THE SAFETY AND OPERATING INSTRUCTIONS FOR FUTURE USE.

SAFETY INFORMATION

IP44

- The light is only suitable for use indoors or in roofed outdoor areas.
- IP20 and suitable for use in interiors, in dry, enclosed rooms.
- The light is not suitable for attaching on uneven surface. The light may otherwise fall. This can result in product damage and / or injuries.
- **Battery housing temperature min. 5 ° C, max. 50 ° C (4 years expected lifetime)**

- Don't install under power.
- Follow the instruction manual for installation.
- Installation only by qualified and authorised persons.
- **Only the original battery may be used.**
- Do not use the product when it has been damaged (defective covers) or there are operational faults such as flickering, smoking, steaming, crackling noises or the smell of smoke.
- A damaged or defective product must be changed or repaired by the manufacturer, a service person or a comparable qualified person.
- Installation only under observance of the valid guidelines specific to application and country among others VDE 0.100.
- Never open one of the electrical operating agents or plug any objects into them. Such procedures signify a danger to life through electrical shock.
- Absolutely avoid contact between the product and water or other liquids. For reasons of electrical safety, the light may not be placed in contact with water or other liquids or submerged in water.
- The product may not be changed or modified.

MAINTENANCE AND CLEANING

- **Once a week, the function key need to be pressed, an endurance test need to be carried out once a year** (see overleaf installation instructions)
- The LED light agent cannot be replaced.
- Do not use solvents, such as benzene and similar agents. The light would be damaged thereby.
- Only use a dry, lint-free cloth for cleaning the product.

DISPOSAL

The packaging consists of environmentally friendly materials.
Dispose of them in the local recycling containers.

Do not dispose of this product in the household garbage when it has reached the end of its lifecycle, but rather take it to a disposal center. Your local officials will provide you with information about collection offices and their business hours.

The battery should be removed before disposing of the device and disposed of separately from the device. For the purposes of environmental protection, batteries and rechargeable batteries must not be disposed of with normal household waste, but must be delivered to appropriate collection points. Also observe the applicable statutory regulations for battery disposal.

INTENDED USAGE

This product will only serve the purpose of illumination.

The light is only suitable for use indoors or in roofed outdoor areas.

SCOPE OF DELIVERY

1 LED luminaire emergency light components 1-3 hours
1 Tridonic emergency light operating device
1 NIMH KU 5,0 C5A
1 x set of instructions for assembly, operation and safety
1 x mounting kit

address | contact

A.L.S. GmbH
Mastorter Str. 31 | 88069 Tettnang (Germany)
Tel.: +49 (0) 75 42 93 44-0 | Fax.: +49 (0) 75 42 93 44-30
E-Mail: info@als.de | Web: www.als.de

Version: 2019-04-01

EN

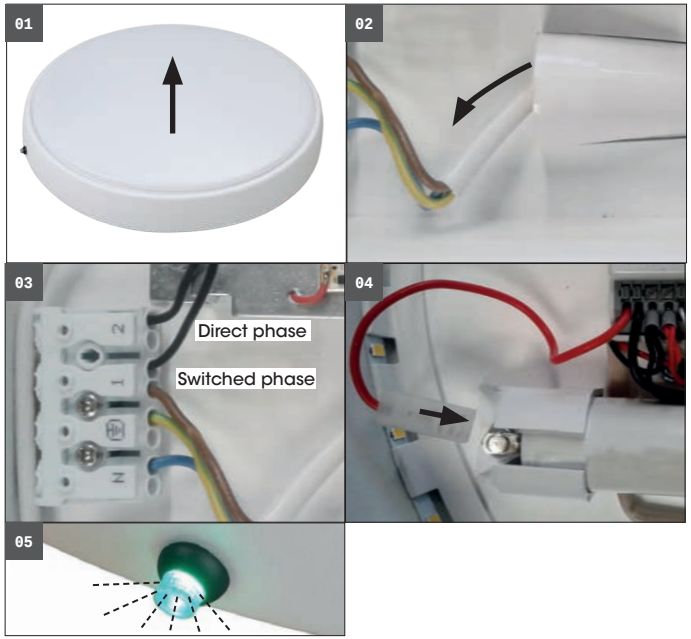

Assembly instructions

Turn Off power supply before starting any insta lation!
Do not connect the device under power!

Carefully remove the LED luminaire from its packaging.

Picture 01: Carefully remove the opal acrylic glass tray from the luminaire.

Picture 02: Insert the 4-wire connection cable to the terminal through the cable gland into the luminaire.

Picture 03: At terminal **1**, the switched phase is connected. (light output).
At terminal **2** the permanent phase is connected (emergency light).
Symbol electrical grounding = electrical grounding
N = neutral conductor
The switched and the non-switched phase at the EM powerLED have to be supplied by the same phase of the voltage network.

Picture 04: Before switching on the fuse, plug in the connector at the positive pole of the battery. Switch on the power supply at the automatic circuit breaker.

Picture 05: After switching on the power supply, the battery is checked for function and charge status. With a delay of 5-8 seconds, the green LED in the Test switch must light up permanently. The battery charges for 15 hours after discharge. After that the device changes into the maintenance charging mode.

Once a week, the function key need to be pressed
An endurance test need to be carried out once a year

Weekly functional test:
Picture 05: When pressing the test button, the emergency light LEDs must light up. When the test button is released, the emergency light LEDs must switch off and the green LED indicator light shines permanently. The functional test of the emergency lighting function is completed.

Annual functional test:
The endurance test must be carried out annually.
Switch off the power supply and check the duration of the emergency lighting function according to the jumper setting. If the green LED in the test button is switched off when the supply voltage is applied or the emergency light LEDs do not light up when the test button is pressed, the battery must be replaced.

Note: The test procedure of each individual emergency light must be logged (with date and auditor). The battery must be replaced after about 4 years against a new battery.

Storage battery:
- Avoid environment with corrosive gas
- Disconnect the battery before storage or delivery
- Do not store batteries in a discharged state
- Store batteries within the specified temperature range at low humidity

Optimum storage conditions for batteries are:
– relative humidity: < 65 %
– temperature: -20 ... +25° C for up to 12 months after printed production date

Long-term storage of the batteries in the disconnected state leads to self-discharge and deactivation of the chemical components. It may be necessary to charge and discharge the rechargeable batteries several times to restore their original performance.

Properties NiMH batteries
Suitable for high temperatures (up to a maximum of 55 ° C) depending on the charging algorithm used
Expected lifetime: 4 years
Max. storage time: up to 12 months from production date
Not critical for the environment - no heavy metal content

The outer LED light ring is responsible for normal lighting operation and independent of the emergency light function. The light section LED light ring is switched. In case of power failure, the battery takes over the emergency light function. The emergency light connection must have a permanent phase.

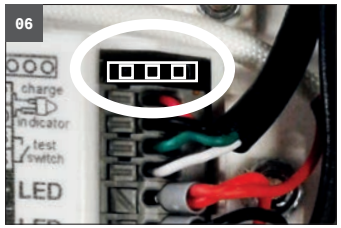

Picture 06: Module supplied with jumper in 3 hours position (position B).

Duration link selection:

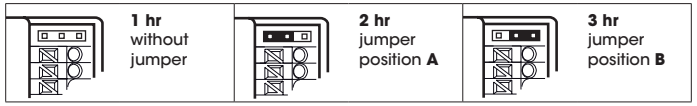

The position of the link will only be read on first power up. If it is changed afterwards both the battery and mains supply must be disconnected for 10 seconds to enable the EM powerLED to read.

The new link position on reconnection. **If the jumper position is changed after installation without this reset, the newly set operating time will not be applied!**

Wiring diagram

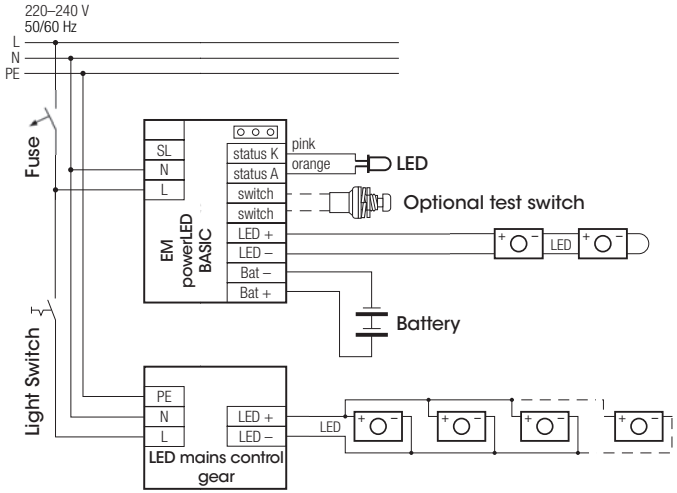

Simple CORRIDOR FUNCTION with EM powerLED 1–2 W

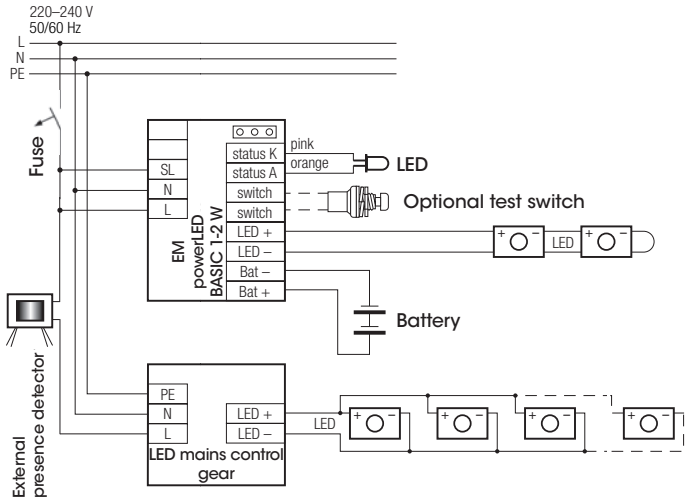

Fixing materials

- Dowel
- Screws

Another installation / assembly / materials / types than provided in the manual sheets, release us from any electrotechnical and electrostatic responsibility.

Fixing materials:
The warranty is void if the buyer or a third party repairs or modifies the luminaire.